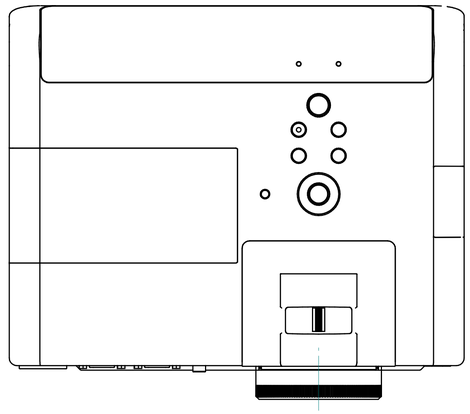

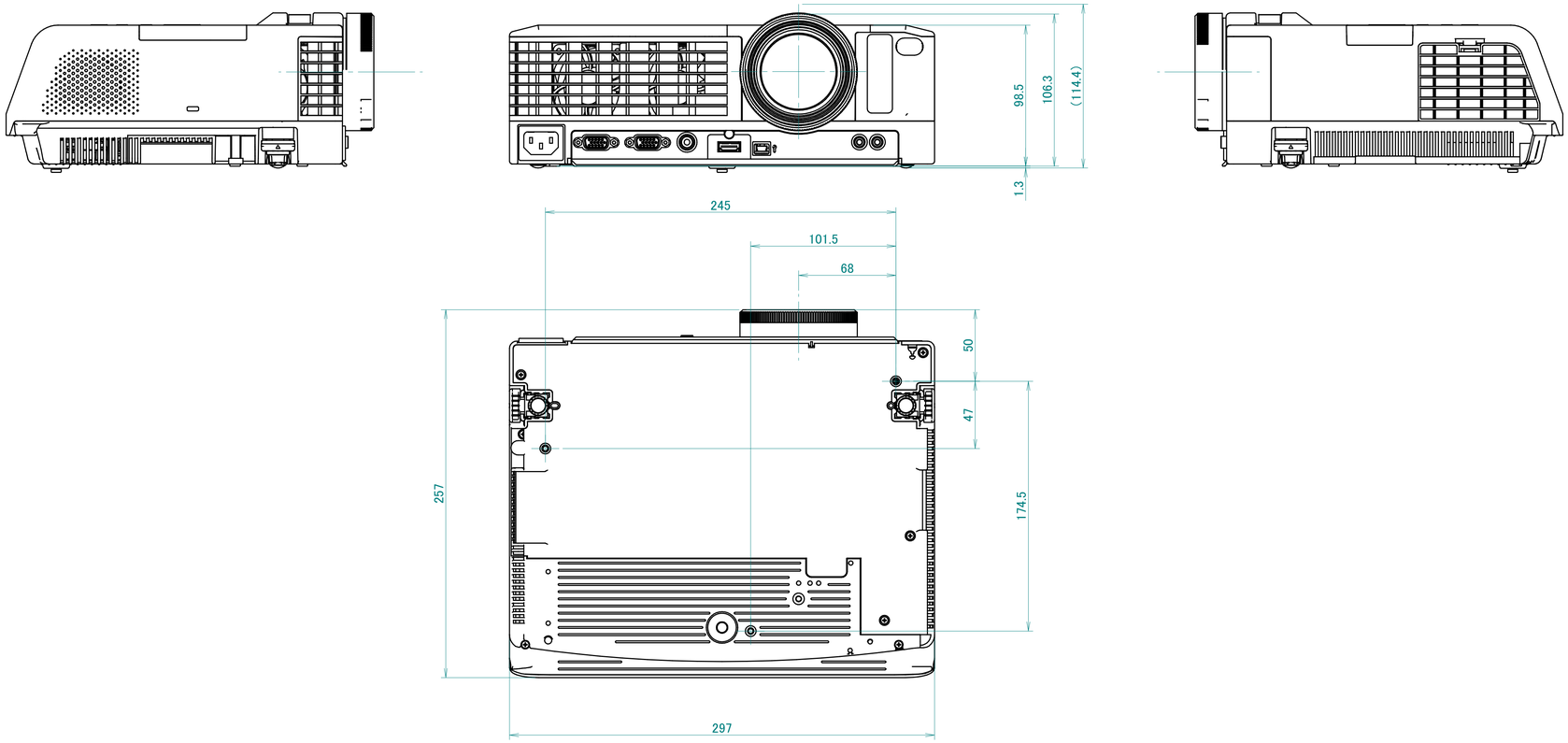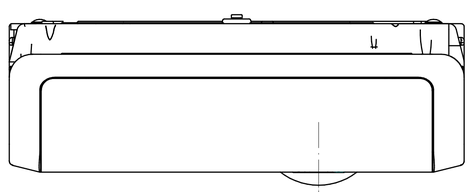
98.5
106.3
(114.4)
1.3
245
101.5
68
50
47
257
174.5
297