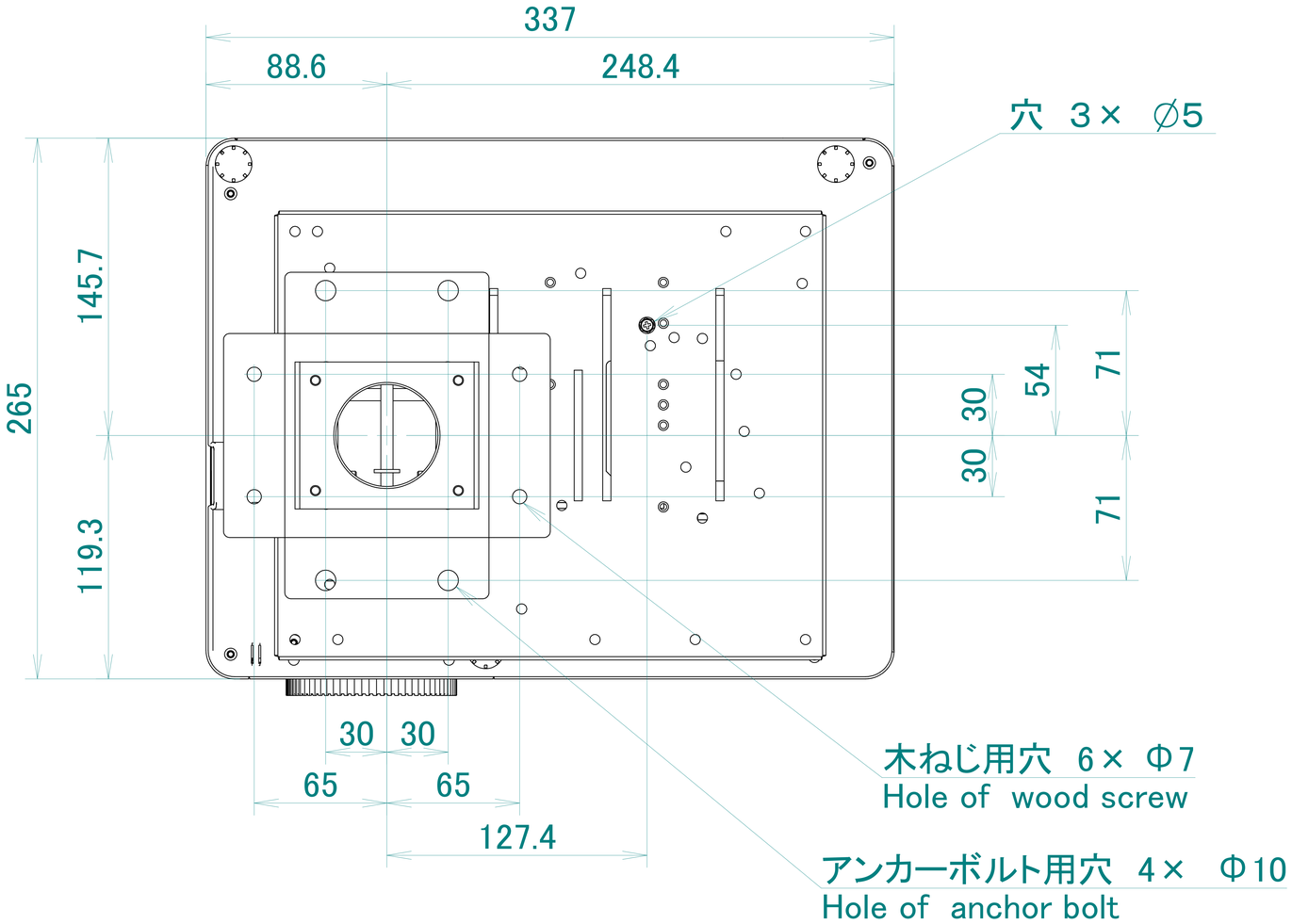
337
88.6
248.4
穴 3× ∅5
265
145.7
119.3
54
71
30
30
71
30 30
65 65
127.4
木ねじ用穴 6× Φ7
Hole of wood screw
アンカーボルト用穴 4× Φ10
Hole of anchor bolt

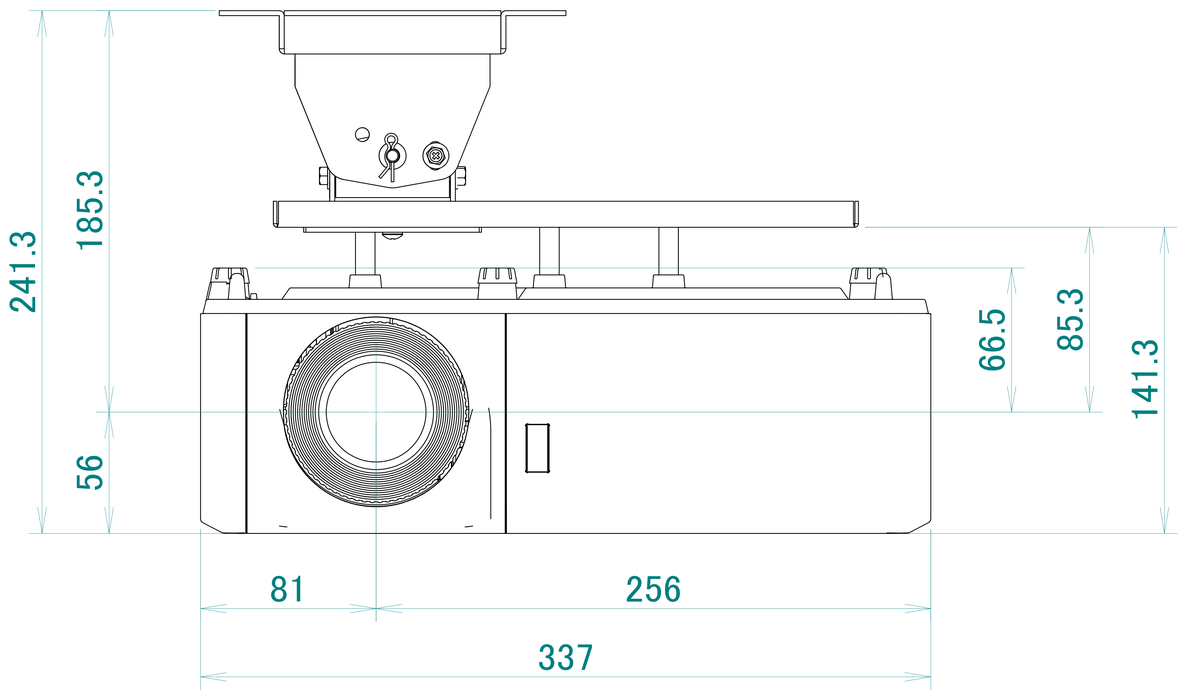
241.3
185.3
56
66.5
85.3
141.3
81
256
337

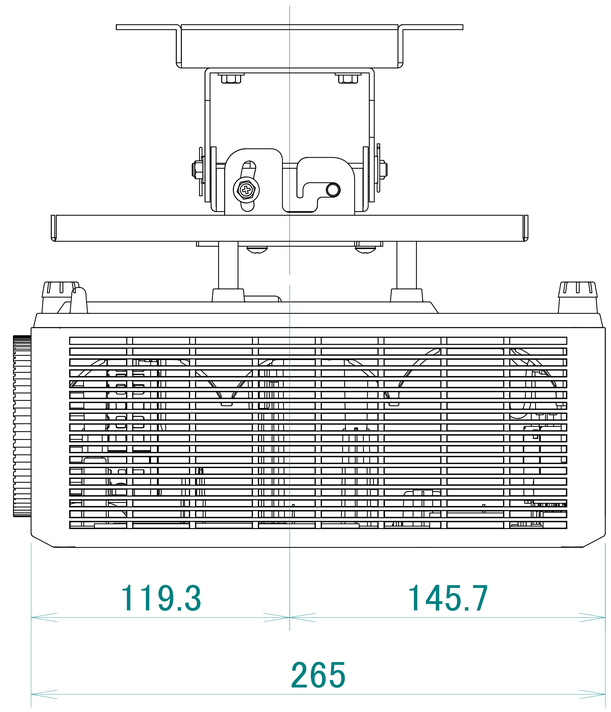
119.3
145.7
265